Caribou™

Exploded views / Part lists

Rev.date (2023-01)

On the following pages you will find the parts used to assemble this product. Please note that some spare parts cannot be purchased individually but are part of a complete kit. Please also note that for some spare parts extra
delivery time may occur.

R82 A/S
Parallelvej 3
8751 Gedved
Denmark

Tel: +45 79 68 58 88
Fax: +45 75 66 51 92
E-mail: R82@etac.com
Web: etac.com

Cvr. Nr.: 16 20 21 85
Swift: JYBA DKKK
Iban No.: DK8072450002003501

CONTENTS

Caribou standard size 1-2, gasspring (102400) 3
Item numbers for Caribou standard size 1-2, gasspring (102400) 4

Caribou standard size 3-4, gasspring (102402) 6
Item numbers for Caribou standard size 3-4, gasspring (102402) 7

Caribou standard size 1-2, Actuator (102453) 9
Item numbers for Caribou standard size 1-2, Actuator (102453) 10

Caribou standard size 3-4, Actuator (102455) 12
Item numbers for Caribou standard size 3-4, Actuator (102455) 13

Caribou standard size 3- firm adj. (115269) 15
Item numbers for Caribou standard size 3-firm adj. (115269) 16

R82 A/S
Parallelvej 3
8751 Gedved
Denmark

Tel: +45 79 68 58 88
Fax: +45 75 66 51 92
E-mail: R82@etac.com
Web: etac.com

Cvr. Nr.: 16 20 21 85
Swift: JYBA DKKK
Iban No.: DK8072450002003501

Caribou standard size 1-2, gasspring (102400)

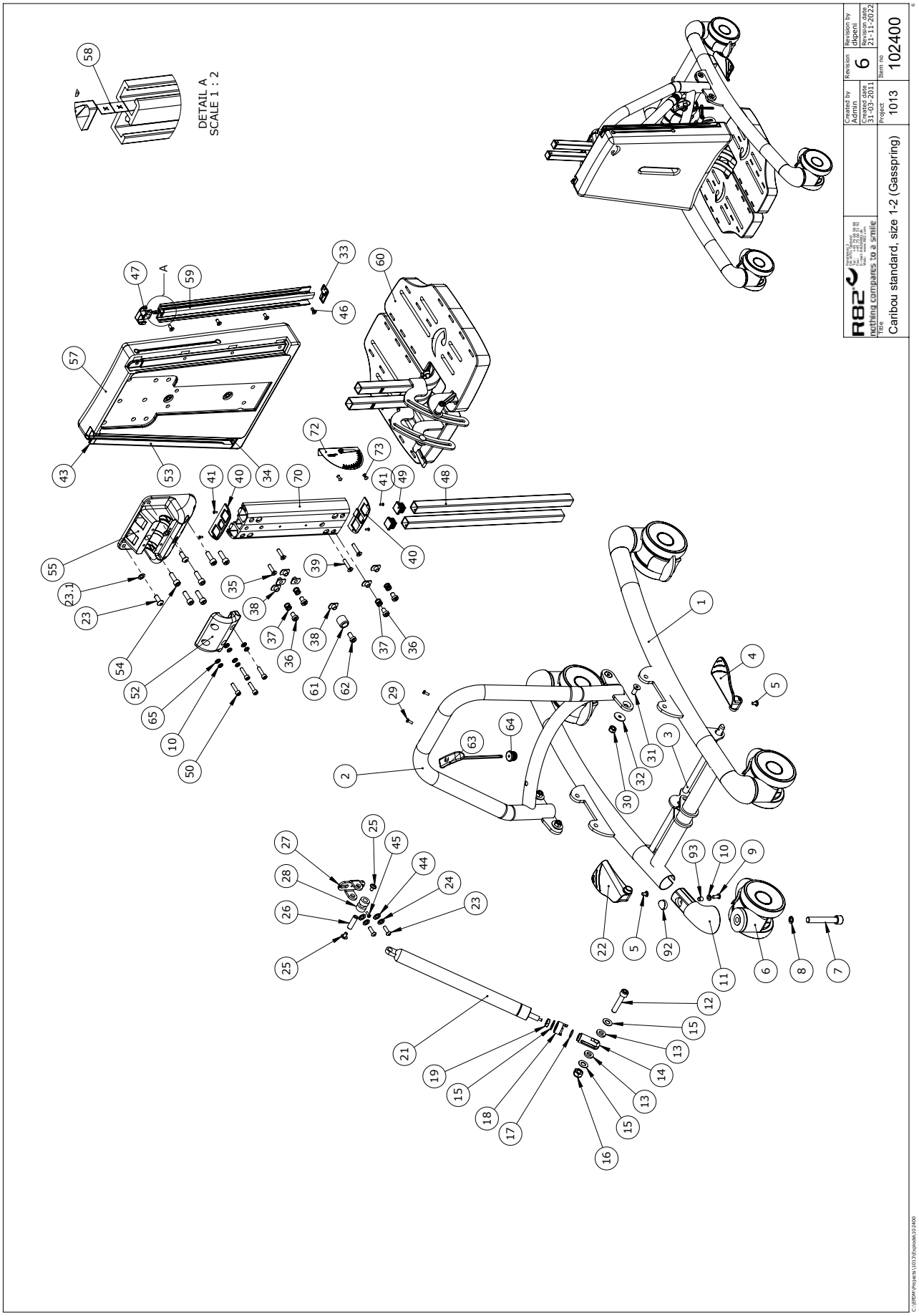

Item numbers for Caribou standard size 1-2, gasspring (102400)

Position	Art nr.	Description	Quantity	Unit of measure	Ean kode
1*	P-77601-30	Lower frame, size 1, yellow	1	PCS	5707292572806
	P-77602-31	Lower frame, size 2, red	1	PCS	5707292572813
2*	P-77606-30	Upperframe size 1, Yellow	1	PCS	5707292572844
	P-77607-31	Upperframe size 2, Red	1	PCS	5707292572851
3*	77751	Release arm size 1	1	PCS	5707292526359
	77752	Release arm size 2	1	PCS	5707292526373
4	77655	Pedal right	1	PCS	5707292527592
5	0640911	Button head M5x10 FZB tuflok	2	PCS	5707292428479
6	3007200	100mm double wheel with brake	4	PCS	5707292559678
7	0606008	Insex M12x75, FZB	4	PCS	5707292560612
8	1101600	Center spring washer 12mm	4	PCS	5707292140197
9	0641205	Button head screw 6x12	4	PCS	5707292597717
10	1100800	Center spring washer 6mm	8	PCS	5707292140166
12	0606006	Insex M10x50, FZB shortened	1	PCS	5707292545169
13	1350006	Pvc bush black 20x10,2x3,5mm	2	PCS	5707292545428
14	84575	Releasehead ø10	1	PCS	5707292542823
15	1102500	Fazet washer 10 mm	2	PCS	5707292140234
16	1607500	Lock nut 10 mm	1	PCS	5707292141385
17	0108000	O-rings o13x2,5 quality xp 70	1	PCS	5707292135124
18	82866	Lock for release head	1	PCS	5707292125606
19	1761000	Counter nut 10x1,0 fine thread	1	PCS	5707292141538
20	1102500	Planning washer 10 mm	1	PCS	5707292140234
21	2206400	Bloc-o-lift 400n	1	PCS	5707292562845
22	77660	Pedal left	1	PCS	5707292527608
23	0662500	Button head screw M8x25 stainl	4	PCS	5707292139580
23.1	1101050	Spring washer M8, wavy FZB	2	PCS	5707292458667
24	1100500	Spring washer 8mm, stainless	2	PCS	5707292140142
25	0659012	B.h. M/flange M6x10 FZB eslock	2	PCS	5707292578358
26	77617	Pin	1	PCS	5707292541017
27	77615	Bracket for angle adjustment	1	PCS	5707292528117
28	1350007	Pvc bush black 20x10,5x9,0mm	2	PCS	5707292545527
29	0609734	Thread form 4x10 FZB PZ	2	PCS	5707292577795
30	1607000	Lock nut 8mm, large pack	4	PCS	5707292141378
31	0624825	Insex screw counters. 8x25	4	PCS	5707292139078
32	1102010	Face plate 8,4x18x2mm, FZB	4	PCS	5707292429766
33	84607	Profile end prop	1	PCS	5707292548023
34	84606	Profile end prop	1	PCS	5707292545558
35	0622800	Insex screw counters. 6x20	2	PCS	5707292138972
36	0603525	Insex low head M8x12 stainless	4	PCS	5707292433749
37	0301006	Spring 1x10x10 mm stainless	4	PCS	5707292542229
38	1600521	Welding nut M8 w/flange	7	PCS	5707292360106
39	0623200	Insex screw counters. 6x30	2	PCS	5707292138996
40	77680	End plate	2	PCS	5707292527615
41	1940010	Plastite 60, 2,9x6,5	4	PCS	5707292142573
43	77688	End for Side profile	1	PCS	5707292540997
44	1103200	Fazet washer 8x16x1,5mm, FZB	2	PCS	5707292140296
45	0609734	Thread form 4x10 FZB PZ	1	PCS	5707292577795
46	0615016	Insex screw 5x16	8	PCS	5707292138859
*choose size/color					

R82 A/S
Parallelvej 3
8751 Gedved
Denmark

Tel: +45 79 68 58 88
Fax: +45 75 66 51 92
E-mail: R82@etac.com
Web: etac.com

Cvr. Nr.: 16 20 21 85
Swift: JYBA DKKK
Iban No.: DK8072450002003501

Position	Art nr.	Description	Quantity	Unit of measure	Ean kode
47	77689	End for Side profile	1	PCS	5707292541000
48*	84576	Tube 20x20x2mm L=455mm	2	PCS	5707292541956
	84577	Basic pole, size 2, 575 mm	2	PCS	5707292545572
49	2504502	Wear 20x20x0,8-3 black	4	PCS	5707292582591
50	0609827	Stainless insex M6x20	4	PCS	5707292375049
52	77647	Mounting cover	1	PCS	5707292527561
53*	77706	Side profile, size 1, Left	1	PCS	5707292527868
	77707	Side profile, size 2, Left	1	PCS	5707292563521
54	0603535	Insex low head M8x25	6	PCS	5707292575319
55	77646	Mounting base	1	PCS	5707292527370
57*	77731	Base plate size 1 , mounted	1	PCS	5707292527943
	77732	Base plate size 2 , mounted	1	PCS	5707292527950
58*	77671	Side profile, base plate, sz 1	1	PCS	5707292527721
	77672	Side profile, base plate, sz 2	1	PCS	5707292527738
59	102510	Adjustment indicator, size 2	2	PCS	5707292562548
60*	124183	Footplate complete size 1	1	SÆT	5707292800572
	124189	Footplate complete size 2	1	SÆT	5707292800527
61	102408	Stop block, size 1+2	1	PCS	5707292561190
62	0603530	Insex low head M8x16 stainless	1	PCS	5707292412492
63	75291	Hexagon key nv=5	1	PCS	5707292437655
64	102586	Ferrule round with hole.	1	PCS	5707292563477
65	1105060	SS washer M6 6,4x12x1,6	4	PCS	5707292140357
70	77681	Center profile, base sz1,2,4	1	PCS	5707292527790
72	5040080	Protractor	1	PCS	5707292404459
73	0506519	Stainless blind rivet 4x12	2	PCS	5707292137388
11+92+93	103234	Wheel mount	4	PCS	5707292565877
*choose size/color					

R82 A/S
Parallelvej 3
8751 Gedved
Denmark

Tel: +45 79 68 58 88
Fax: +45 75 66 51 92
E-mail: R82@etac.com
Web: etac.com

Cvr. Nr.: 16 20 21 85
Swift: JYBA DKKK
Iban No.: DK8072450002003501

Caribou standard size 3-4, gasspring (102402)

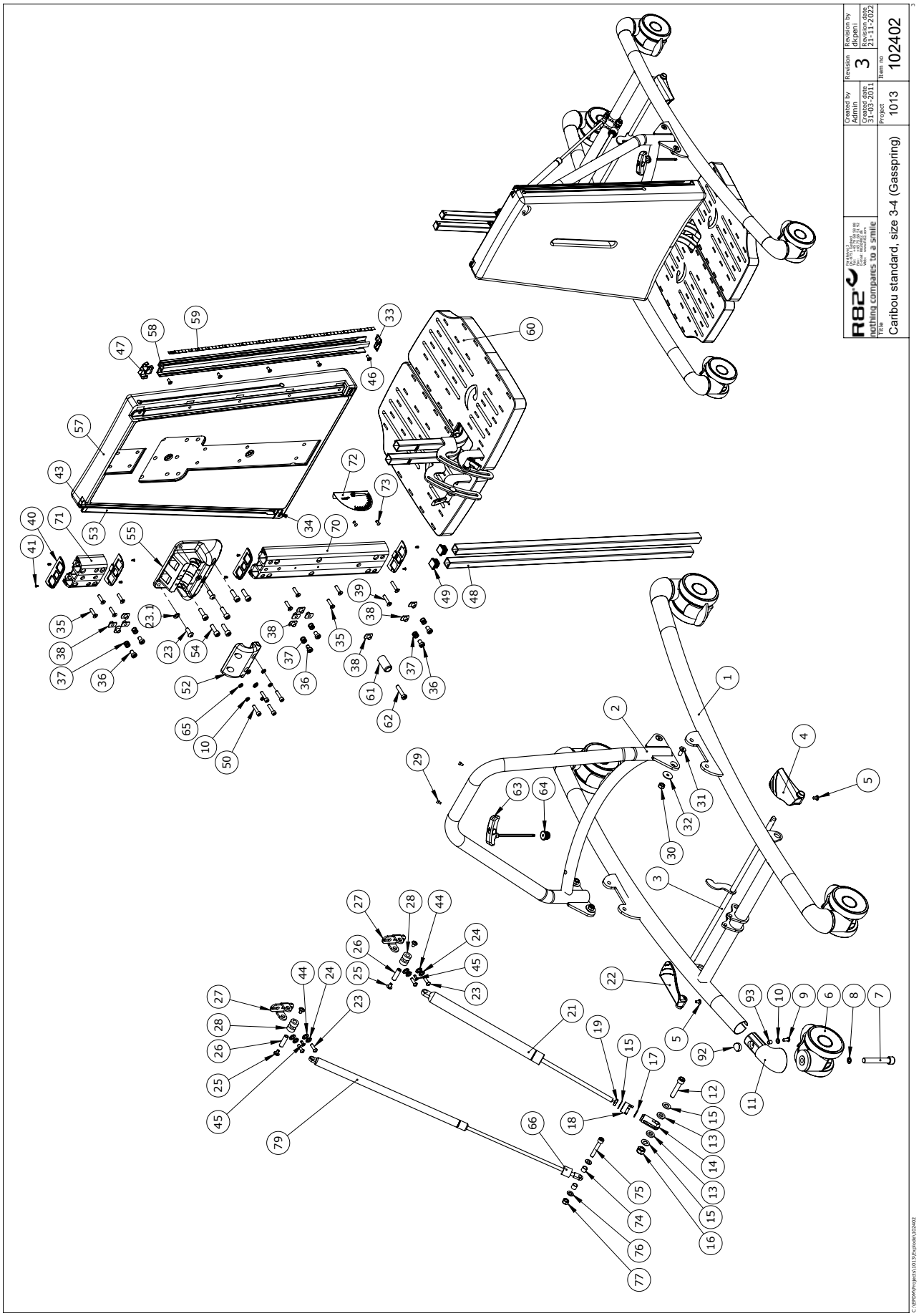

R82 A/S
Parallelvej 3
8751 Gedved
Denmark

Tel: +45 79 68 58 88
Fax: +45 75 66 51 92
E-mail: R82@etac.com
Web: etac.com

Cvr. Nr.: 16 20 21 85
Swift: JYBA DKKK
Iban No.: DK8072450002003501

Item numbers for Caribou standard size 3-4, gasspring (102402)

Position	No.	Description		Quantity	Unit of Measure	Ean code
1*	P-77603-32	Lower frame, size 3, Blue		1	PCS	5707292572820
	77603-32	Lower frame, size 3, Blue	Caribou	1	PCS	5707292557407
	P-77604-35	Lower frame, size 4, painted		1	PCS	5707292832542
2*	77608-32	Upperframe size 3, blue		1	PCS	5707292557438
	P-77609-35	Upperframe size 4, painted		1	PCS	5707292832535
3*	77753	Release arm size 3		1	PCS	5707292526380
	77754	Release arm size 4		1	PCS	5707292543066
4	77655	Pedal right		1	PCS	5707292527592
5	0640911	Button head M5x10 FZB tuflok		2	PCS	5707292428479
6	3007200	100mm double wheel with brake		4	PCS	5707292559678
7	0606008	Insex M12x75, FZB		4	PCS	5707292560612
8	1101600	Center spring washer 12mm		4	PCS	5707292140197
9	0641205	Button head screw 6x12		4	PCS	5707292597717
10	1100800	Center spring washer 6mm		4	PCS	5707292140166
12	0606006	Insex M10x50, FZB shortened		1	PCS	5707292545169
13	1350006	Pvc bush black 20x10,2x3,5mm		2	PCS	5707292545428
14	84575	Releasehead ø10		1	PCS	5707292542823
15	1103400	Fazet washer 10 mm		2	PCS	5707292140319
16	1607500	Lock nut 10 mm		1	PCS	5707292141385
17	0108000	O-rings o13x2,5 quality xp 70		1	PCS	5707292135124
18	82866	Lock for release head		1	PCS	5707292125606
19	1761000	Counter nut 10x1,0 fine thread		1	PCS	5707292141538
20	1102500	Planning washer 10 mm		1	PCS	5707292140234
21*	2206420-1	Bloc-o-lift 600N	Caribou 3	1	PCS	5707292568717
	2206440	Bloc-o-Lift 700N		1	PCS	5707292562883
22	77660	Pedal left		1	PCS	5707292527608
23	0662500	Button head screw M8x25 stainl		6	PCS	5707292139580
23.1	1101050	Spring washer M8, wavy FZB		2	PCS	5707292458667
24	1100500	Spring washer 8mm, stainless		4	PCS	5707292140142
25*	0659012	B.h. M/flange M6x10 FZB eslock	M6x10-bf-fzb-a-10.9	4	PCS	5707292578358
	0659010	Button head with flange M6x10		4	PCS	5707292356819
26	77617	Pin		2	PCS	5707292541017
27	77615	Bracket for angle adjustment		2	PCS	5707292528117
28	1350007	Pvc bush black 20x10,5x9,0mm		2	PCS	5707292545527
29	0609734	Thread form 4x10 FZB PZ	M4x10-cl-fzb-a-8.8	2	PCS	5707292577795
30	1607000	Lock nut 8mm, large pack		4	PCS	5707292141378
31	0624825	Insex screw counters. 8x25		4	PCS	5707292139078
32	1102010	Face plate 8,4x18x2mm, FZB		4	PCS	5707292429766
33	84607	Profile end prop		1	PCS	5707292548023
34	84606	Profile end prop		1	PCS	5707292545558
35	0622800	Insex screw counters. 6x20		8	PCS	5707292138972
36	0603525	Insex low head M8x12 stainless		6	PCS	5707292433749
37	0301006	Spring 1x10x10 mm stainless	Spring 1x10x10 mm stainless	6	PCS	5707292542229
38	1600521	Welding nut M8 w/flange		11	PCS	5707292360106
39	0623200	Insex screw counters. 6x30		2	PCS	5707292138996
40	77680	End plate		4	PCS	5707292527615

* Choose size / color

R82 A/S
Parallelvej 3
8751 Gedved
Denmark

Tel: +45 79 68 58 88
Fax: +45 75 66 51 92
E-mail: R82@etac.com
Web: etac.com

Cvr. Nr.: 16 20 21 85
Swift: JYBA DKKK
Iban No.: DK8072450002003501

Position	No.	Description		Quantity	Unit of Measure	Ean code
41	1940010	Plastite 60, 2,9x6,5		8	PCS	5707292142573
43	77688	End for Side profile		1	PCS	5707292540997
44	1103200	Fazet washer 8x16x1,5mm, FZB		4	PCS	5707292140296
45	0609734	Thread form 4x10 FZB PZ	M4x10-cl-fzb-a-8.8	2	PCS	5707292577795
46	0615016	Insex screw 5x16		10	PCS	5707292138859
47	77689	End for Side profile		1	PCS	5707292541000
48*	84578	Basic pole, size 3, 750 mm		2	PCS	5707292545589
	84579	Basic pole, size 4, 1000 mm		2	PCS	5707292545596
49	2504502	Wear 20x20x0,8-3 black	V20x20x0,8-3	4	PCS	5707292582591
50	0609827	Stainless insex M6x20		4	PCS	5707292375049
52	77647	Mounting cover		1	PCS	5707292527561
53*	77708	Side profile, size 3, Left		1	PCS	5707292563538
	77709	Side profile, size 4, Left		1	PCS	5707292563545
54	0603535	Insex low head M8x25	M8x25-CL-FZB-A-8.8	6	PCS	5707292575319
55	77646	Mounting base		1	PCS	5707292527370
57*	77733	Base plate size 3 , mounted		1	PCS	5707292527967
	77734	Base plate size 4 , mounted		1	PCS	5707292527974
58*	77673	Side profile, base plate, sz 3		1	PCS	5707292527745
	77674	Side profile, base plate, sz 4		1	PCS	5707292527752
59	102510	Adjustment indicator, size 2		2	PCS	5707292562548
60*	124196	Footplate complte size 3		1	SÆT	5707292800473
	121990	Footplate assembly size 4		1	SÆT	5707292800428
61	102451	Stop block, size 3+4		1	PCS	5707292561206
62	0603537	Insex low head M8x35	M8x35-CL-FZB-A-8.8	1	PCS	5707292575333
63	75291	Hexagon key nv=5		1	PCS	5707292437655
64	102586	Ferrule round with hole.		1	PCS	5707292563477
65	1105060	SS washer M6 6,4x12x1,6		4	PCS	5707292140357
66*	104769	Adjustment bush 10mm		1	PCS	5707292570338
	104770	Adjustment bush 20mm		1	PCS	5707292570345
70	100809	Center profile, base size 3+4		1	PCS	5707292561923
71	77683	Center profile,base sz 3-4		1	PCS	5707292527813
72	5040080	Protractor		1	PCS	5707292404459
73	0506519	Stainless blind rivet 4x12		1	PCS	5707292137388
74	1350005	Pvc bush black 15x8,2x4mm		4	PCS	5707292425133
75	0603550	Insex screw 8x50		1	PCS	5707292138255
76	1103200	Fazet washer 8x16x1,5mm, FZB		2	PCS	5707292140296
77	1607000	Lock nut 8mm, large pack		1	PCS	5707292141378
79*	2206410-1	Lift-o-mat 80n	Caribou 3	1	PCS	5707292568700
	2206430-1	Lift-o-mat 80N	Caribou 4	1	PCS	5707292568724
	2206430	Lift-o-mat 80N		1	PCS	5707292562876
11+92+93	103234	Wheel mount		4	PCS	5707292565877
* Choose size / color						

Caribou standard size 1-2, Actuator (102453)

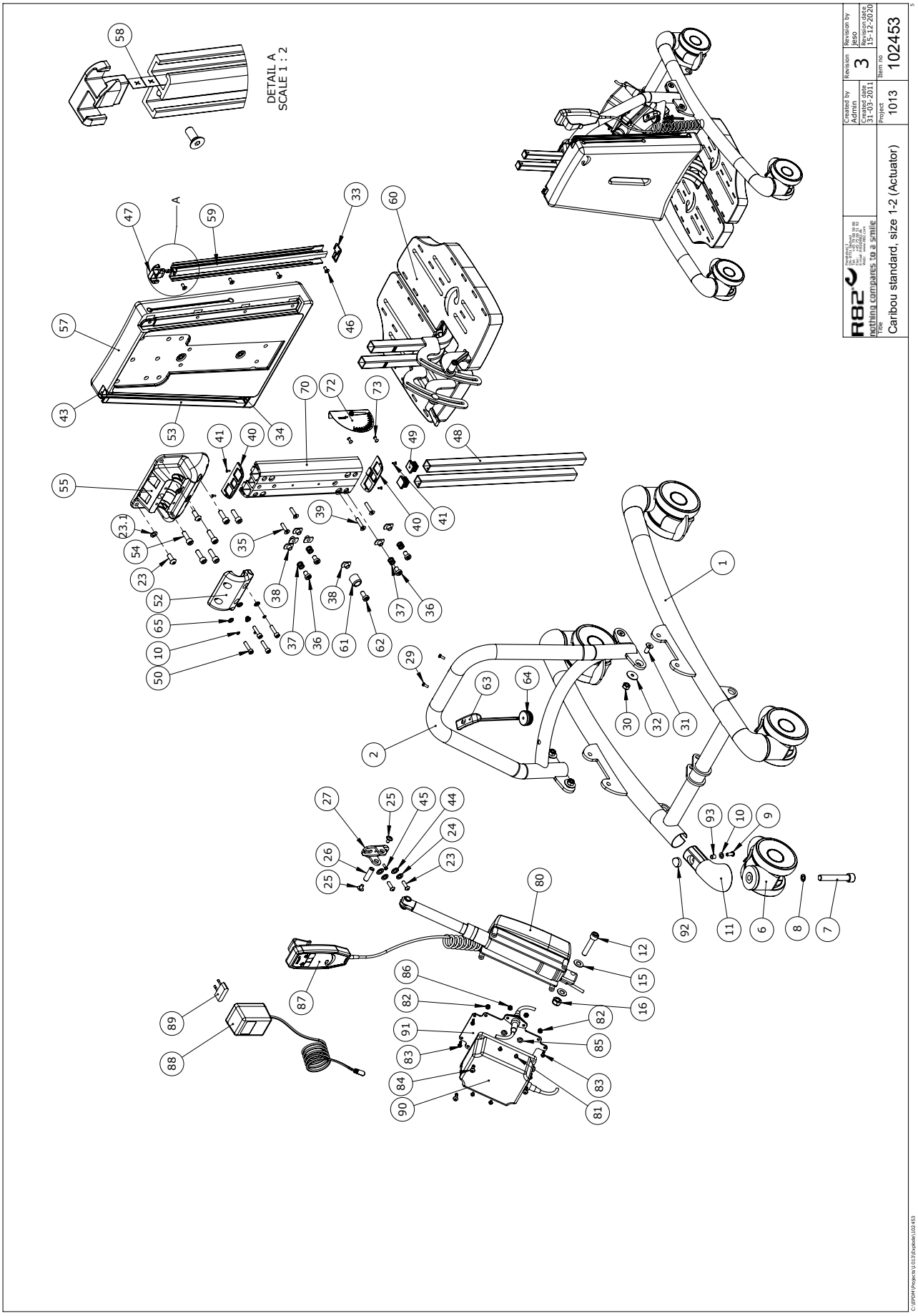

R82 A/S
Parallelvej 3
8751 Gedved
Denmark

Tel: +45 79 68 58 88
Fax: +45 75 66 51 92
E-mail: R82@etac.com
Web: etac.com

Cvr. Nr.: 16 20 21 85
Swift: JYBA DKKK
Iban No.: DK8072450002003501

Item numbers for Caribou standard size 1-2, Actuator (102453)

Position	Art nr.	Description	Quantity	Unit of measure	Ean kode
1*	P-77601-30	Lower frame, size 1, yellow	1	PCS	5707292572806
	P-77602-31	Lower frame, size 2, red	1	PCS	5707292572813
2*	P-77606-30	Upperframe size 1, Yellow	1	PCS	5707292572844
	P-77607-31	Upperframe size 2, Red	1	PCS	5707292572851
6	3007200	100mm double wheel with brake	4	PCS	5707292559678
7	0606008	Insex M12x75, FZB	4	PCS	5707292560612
8	1101600	Center spring washer 12mm	4	PCS	5707292140197
9	0641205	Button head screw 6x12	4	PCS	5707292597717
10	1100800	Center spring washer 6mm	4	PCS	5707292140166
12	0606006	Insex M10x50, FZB shortened	1	PCS	5707292545169
15	1102500	Fazet washer 10 mm	2	PCS	5707292140234
16	1607500	Lock nut 10 mm	1	PCS	5707292141385
23	0662500	Button head screw 8x25 stainl.	4	PCS	5707292139580
23.1	1101050	Spring washer M8	2	PCS	5707292458667
24	1100500	Spring washer 8mm, stainless	2	PCS	5707292140142
25	0659012	B.h. M/flange M6x10 FZB eslock	2	PCS	5707292578358
26	77617	Pin	1	PCS	5707292541017
27	77615	Bracket for angle adjustment	1	PCS	5707292528117
29	0609734	Thread form 4x10 FZB PZ	2	PCS	5707292577795
30	1607000	Lock nut 8mm, large pack	4	PCS	5707292141378
31	0624825	Insex screw counters. 8x25	4	PCS	5707292139078
32	1102010	Face plate 8,4x18x2mm, FZB	4	PCS	5707292429766
33	84607	Profile end prop	1	PCS	5707292548023
34	84606	Profile end prop	1	PCS	5707292545558
35	0622800	Insex screw counters. 6x20	2	PCS	5707292138972
36	0603525	Insex low head M8x12 stainless	4	PCS	5707292433749
37	0301006	Spring 1x10x10 mm stainless	4	PCS	5707292542229
38	1600521	Welding nut M8 w/flange	7	PCS	5707292360106
39	0623200	Insex screw counters. 6x30	2	PCS	5707292138996
40	77680	End plate	2	PCS	5707292527615
41	1940010	Plastite 60, 2,9x6,5	4	PCS	5707292142573
43	77688	End for Side profile	1	PCS	5707292540997
44	1103200	Fazet washer 8mm	2	PCS	5707292140296
45	0609734	Thread form 4x10 FZB PZ	1	PCS	5707292577795
46	0615016	Insex screw 5x16	8	PCS	5707292138859
47	77689	End for Side profile	1	PCS	5707292541000
48*	84576	Tube 20x20x2mm L=455mm	2	PCS	5707292541956
	84577	Basic pole, size 2, 575 mm	2	PCS	5707292545572
49	2504502	Wear 20x20x0,8-3 black	4	PCS	5707292582591
50	0609827	Stainless insex M6x20	4	PCS	5707292375049
52	77647	Mounting cover	1	PCS	5707292527561
53	77706	Side profile, size 1, Left	1	PCS	5707292527868
53	77707	Side profile, size 2, Left	1	PCS	5707292563521
54	0603535	Insex low head M8x25	6	PCS	5707292575319
55	77646	Mounting base	1	PCS	5707292527370
*choose size/color					

R82 A/S
Parallelvej 3
8751 Gedved
Denmark

Tel: +45 79 68 58 88
Fax: +45 75 66 51 92
E-mail: R82@etac.com
Web: etac.com

Cvr. Nr.: 16 20 21 85
Swift: JYBA DKKK
Iban No.: DK8072450002003501

Position	Art nr.	Description	Quantity	Unit of measure	Ean kode
57*	77731	Base plate size 1 , mounted	1	PCS	5707292527943
	77732	Base plate size 2 , mounted	1	PCS	5707292527950
58*	77671	Side profile, base plate, sz 1	1	PCS	5707292527721
	77672	Side profile, base plate, sz 2	1	PCS	5707292527738
59	102510	Adjustment indicator, size 2	2	PCS	5707292562548
60*	124183	Footplate complete size 1	1	SÆT	5707292800572
	124189	Footplate complete size 2	1	SÆT	5707292800527
61	102408	Stop block, size 1+2	1	PCS	5707292561190
62	0603530	Insex low head M8x16 stainless	1	PCS	5707292412492
63	75291	Hexagon key nv=5	1	PCS	5707292437655
64	102586	Ferrule round with hole.	1	PCS	5707292563477
65	1105060	Stainless washer 6mm	4	PCS	5707292140357
70	77681	Center profile, base sz1,2,4	1	PCS	5707292527790
72	5040080	Protractor	1	PCS	5707292404459
73	0506519	Stainless blind rivet 4x12	2	PCS	5707292137388
80	2222030	Actuator LA28 for Caribou 1+2	1	PCS	5707292543363
81	1902595	Crosshead screw M3x12, FZB	4	PCS	5707292565099
82	1606300	Lock nut 5 mm	4	PCS	5707292141354
83	1940007	Eco syn 4x16 torx	4	PCS	5707292520593
84	1902760	Cross-headed screw 5x16 mm	4	PCS	5707292142146
85	1102800	Fazet washer 4mm	4	PCS	5707292140265
86	1606250	Self-locking nut 3mm	4	PCS	5707292408396
87	2220600	Handset w/r82 print & charging	1	PCS	5707292492241
88	2222161	Charger with plugs	1	PCS	5707292574046
90	2222110	Batteryboks ba18027	1	PCS	5707292492258
91	84599	Plate for battery	1	PCS	5707292543233
11+92+93	103234	Wheel Mount Chrome	4	PCS	5707292565877
*choose size/color					

R82 A/S
Parallelvej 3
8751 Gedved
Denmark

Tel: +45 79 68 58 88
Fax: +45 75 66 51 92
E-mail: R82@etac.com
Web: etac.com

Cvr. Nr.: 16 20 21 85
Swift: JYBA DKKK
Iban No.: DK8072450002003501

Caribou standard size 3-4, Actuator (102455)

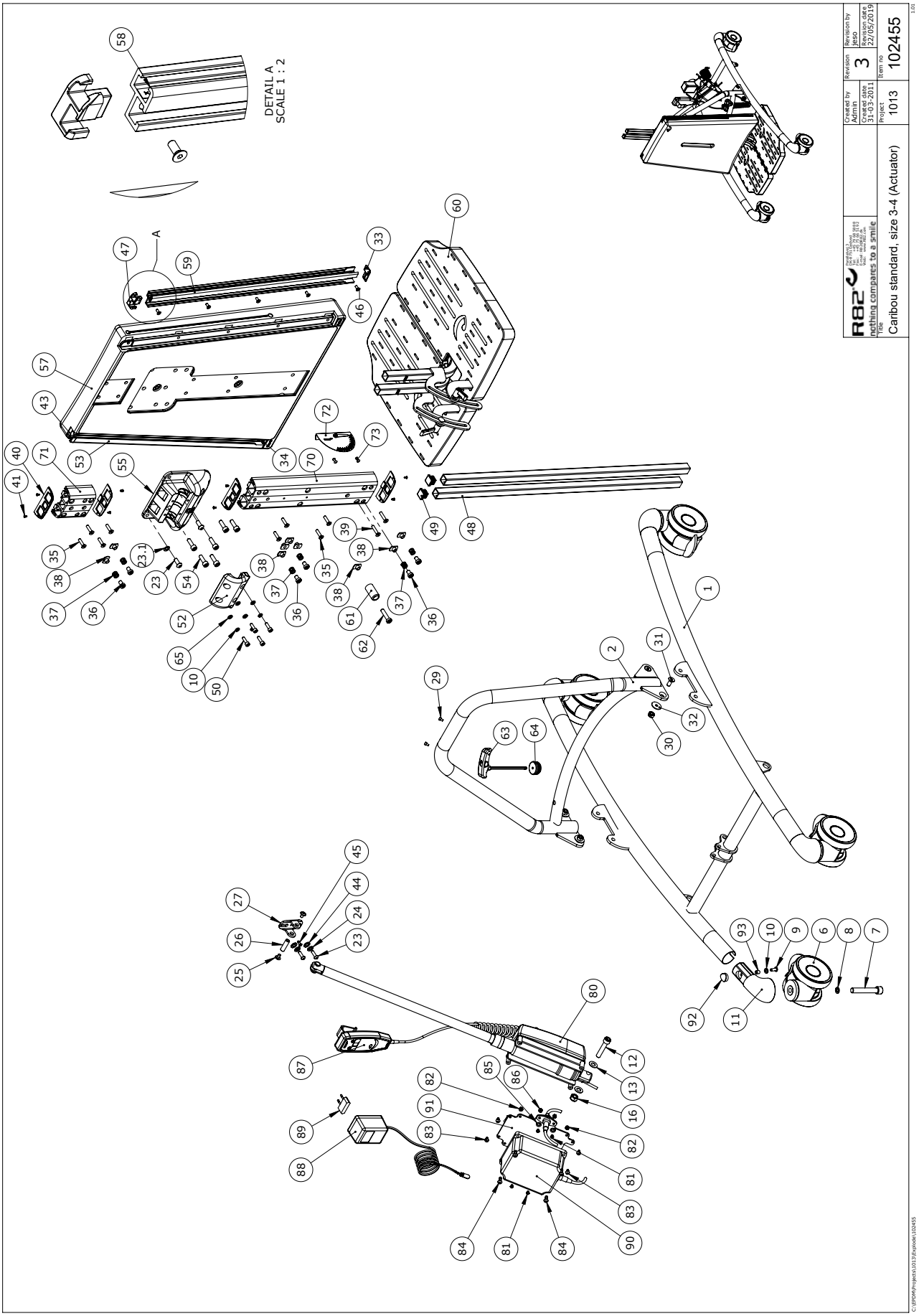

Item numbers for Caribou standard size 3-4, Actuator (102455)

Position	Art nr.	Description	Quantity	Unit of measure	Ean kode
1*	P-77603-32	Lower frame, size 3, Blue	1	PCS	5707292572820
	P-77604-35	Lower frame, size 4, painted	1	PCS	5707292832542
2*	P-77608-32	Upperframe size 3, blue	1	PCS	5707292572868
	P-77609-35	Upperframe size 4, painted	1	PCS	5707292832535
6	3007200	100mm double wheel with brake	4	PCS	5707292559678
7	0606008	Insex M12x75, FZB	4	PCS	5707292560612
8	1101600	Center spring washer 12mm	4	PCS	5707292140197
9	0641205	Button head screw 6x12	4	PCS	5707292597717
10	1100800	Center spring washer 6mm	4	PCS	5707292140166
12	0606006	Insex M10x50, FZB shortened	1	PCS	5707292545169
13	1102500	Fazet washer 10 mm	2	PCS	5707292140234
16	1607500	Lock nut 10 mm	1	PCS	5707292141385
23	0662500	Button head screw 8x25 stainl.	4	PCS	5707292139580
23.1	1101050	Spring washer M8	2	PCS	5707292458667
24	1100500	Spring washer 8mm, stainless	2	PCS	5707292140142
25	0659012	B.h. M/flange M6x10 FZB eslock	2	PCS	5707292578358
26	77617	Pin	1	PCS	5707292541017
27	77615	Bracket for angle adjustment	1	PCS	5707292528117
29	0609734	Thread form 4x10 FZB PZ	2	PCS	5707292577795
30	1607000	Lock nut 8mm, large pack	4	PCS	5707292141378
31	0624825	Insex screw counters. 8x25	4	PCS	5707292139078
32	1102010	Face plate 8,4x18x2mm, FZB	4	PCS	5707292429766
33	84607	Profile end prop	1	PCS	5707292548023
34	84606	Profile end prop	1	PCS	5707292545558
35	0622800	Insex screw counters. 6x20	8	PCS	5707292138972
36	0603525	Insex low head M8x12 stainless	6	PCS	5707292433749
37	0301006	Spring 1x10x10 mm stainless	6	PCS	5707292542229
38	1600521	Welding nut M8 w/flange	9	PCS	5707292360106
39	0623200	Insex screw counters. 6x30	2	PCS	5707292138996
40	77680	End plate	4	PCS	5707292527615
41	1940010	Plastite 60, 2,9x6,5	8	PCS	5707292142573
43	77688	End for Side profile	1	PCS	5707292540997
44	1103200	Fazet washer 8mm	2	PCS	5707292140296
45	0609734	Thread form 4x10 FZB PZ	1	PCS	5707292577795
46	0615016	Insex screw 5x16	10	PCS	5707292138859
47	77689	End for Side profile	1	PCS	5707292541000
48	84578	Basic pole, size 3, 750 mm	2	PCS	5707292545589
48	84579	Basic pole, size 4, 1000 mm	2	PCS	5707292545596
49	2504502	Wear 20x20x0,8-3 black	4	PCS	5707292582591
50	0609827	Stainless insex M6x20	4	PCS	5707292375049
52	77647	Mounting cover	1	PCS	5707292527561
53	77708	Side profile, size 3, Left	1	PCS	5707292563538
53	77709	Side profile, size 4, Left	1	PCS	5707292563545
54	0603535	Insex low head M8x25	6	PCS	5707292575319
55	77646	Mounting base	1	PCS	5707292527370
57*	77733	Base plate size 3 , mounted	1	PCS	5707292527967
	77734	Base plate size 4 , mounted	1	PCS	5707292527974
*choose size/color					

R82 A/S
Parallelvej 3
8751 Gedved
Denmark

Tel: +45 79 68 58 88
Fax: +45 75 66 51 92
E-mail: R82@etac.com
Web: etac.com

Cvr. Nr.: 16 20 21 85
Swift: JYBA DKKK
Iban No.: DK8072450002003501

Position	Art nr.	Description	Quantity	Unit of measure	Ean kode
58*	77673	Side profile, base plate, sz 3	1	PCS	5707292527745
	77674	Side profile, base plate, sz 4	1	PCS	5707292527752
59	102510	Adjustment indicator, size 2	2	PCS	5707292562548
60*	124196	Footplate complte size 3	1	SÆT	5707292800473
	121990	Footplate assembly size 4	1	SÆT	5707292800428
61	102451	Stop block, size 3+4	1	PCS	5707292561206
62	0603537	Insex low head M8x35	1	PCS	5707292575333
63	75291	Hexagon key nv=5	1	PCS	5707292437655
64	102586	Ferrule round with hole.	1	PCS	5707292563477
65	1105060	Stainless washer 6mm	4	PCS	5707292140357
70	100809	Center profile, base size 3+4	1	PCS	5707292561923
71	77683	Center profile,base sz 3-4	1	PCS	5707292527813
72	5040080	Protractor	1	PCS	5707292404459
73	0506519	Stainless blind rivet 4x12	2	PCS	5707292137388
80*	2222036	Actuator LA28 Caribou 3	1	PCS	5707292550514
	2222035	Actuator LA28 Caribou 4	1	PCS	5707292544964
81	1902595	Crosshead screw M3x12, FZB	4	PCS	5707292565099
82	1606300	Lock nut 5 mm	4	PCS	5707292141354
83	1940007	Eco syn 4x16 torx	4	PCS	5707292520593
84	1902760	Cross-headed screw 5x16 mm	4	PCS	5707292142146
85	1102800	Fazet washer 4mm	4	PCS	5707292140265
86	1606250	Self-locking nut 3mm	4	PCS	5707292408396
87	2220600	Handset w/r82 print & charging	1	PCS	5707292492241
88	2222161	Charger with plugs	1	PCS	5707292574046
90	2222110	Batteryboks ba18027	1	PCS	5707292492258
91	84599	Plate for battery	1	PCS	5707292543233
11+92+93	103234	Wheel Mount Chrome	4	PCS	5707292565877
*choose size/color					

R82 A/S
Parallelvej 3
8751 Gedved
Denmark

Tel: +45 79 68 58 88
Fax: +45 75 66 51 92
E-mail: R82@etac.com
Web: etac.com

Cvr. Nr.: 16 20 21 85
Swift: JYBA DKKK
Iban No.: DK8072450002003501

Caribou standard size 3- firm adj. (115269)

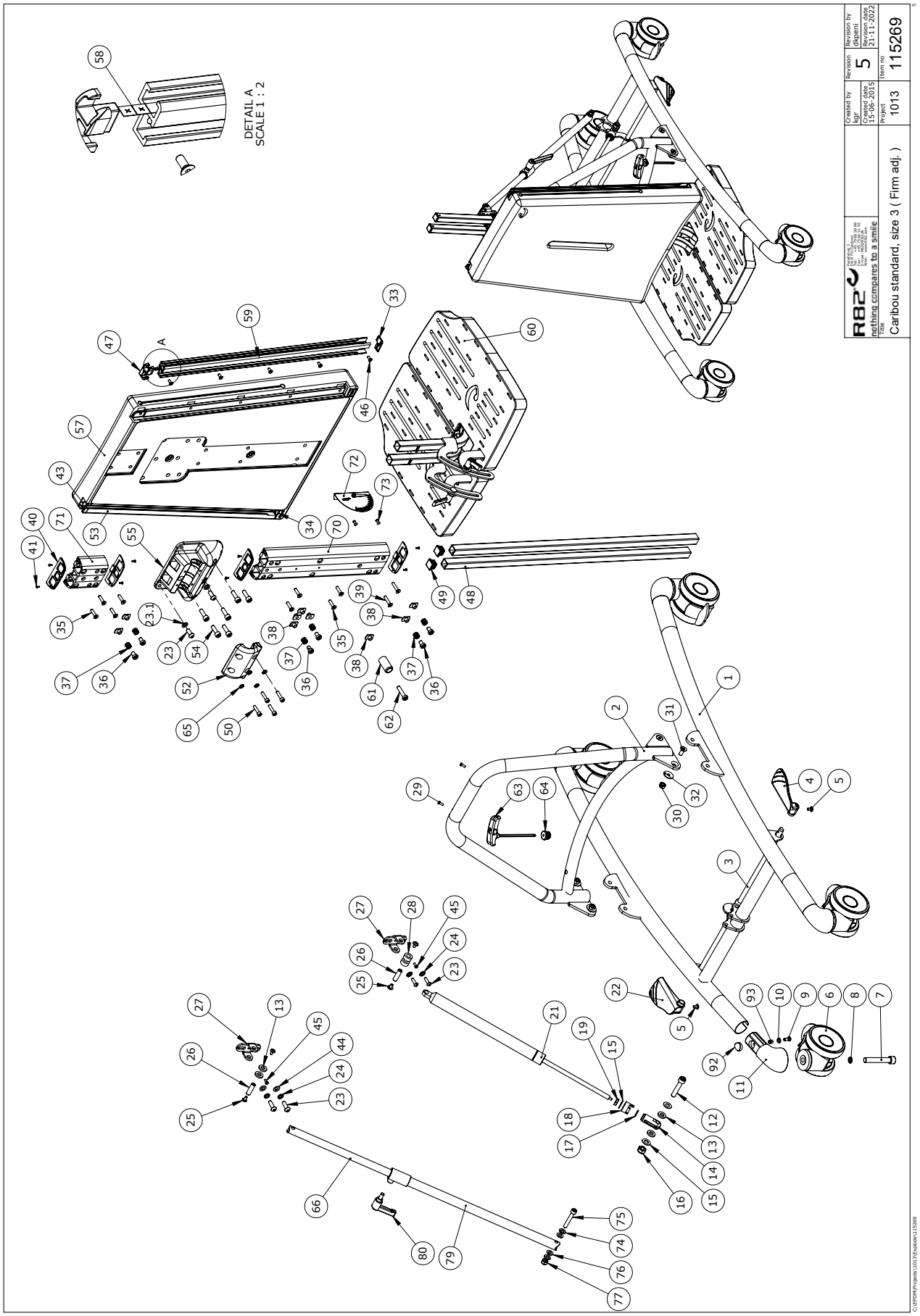

R82 A/S
Parallelvej 3
8751 Gedved
Denmark

Tel: +45 79 68 58 88
Fax: +45 75 66 51 92
E-mail: R82@etac.com
Web: etac.com

Cvr. Nr.: 16 20 21 85
Swift: JYBA DKKK
Iban No.: DK8072450002003501

Item numbers for Caribou standard size 3-firm adj. (115269)

Position	Art nr.	Description	Quantity	Unit of measure	Ean kode
1*	P-77603-32	Lower frame, size 3, Blue	1	PCS	5707292572820
	P-77604-35	Lower frame, size 4, painted	1	PCS	5707292832542
2*	P-77608-32	Upperframe size 3, blue	1	PCS	5707292572868
	P-77609-35	Upperframe size 4, painted	1	PCS	5707292832535
3*	77753	Release arm size 3	1	PCS	5707292526380
	77754	Release arm size 4	1	PCS	5707292543066
4	77655	Pedal right	1	PCS	5707292527592
5	0640911	Button head M5x10 FZB tuflok	2	PCS	5707292428479
6	3007200	100mm double wheel with brake	4	PCS	5707292559678
7	0606008	Insex M12x75, FZB	4	PCS	5707292560612
8	1101600	Center spring washer 12mm	4	PCS	5707292140197
9	0641205	Button head screw 6x12	4	PCS	5707292597717
10	1100800	Center spring washer 6mm	4	PCS	5707292140166
12	0606006	Insex M10x50, FZB shortened	1	PCS	5707292545169
13	1350006	Pvc bush black 20x10,2x3,5mm	4	PCS	5707292545428
14	84575	Releasehead ø10	1	PCS	5707292542823
15	1102500	Fazet washer 10 mm	2	PCS	5707292140234
16	1607500	Lock nut 10 mm	1	PCS	5707292141385
17	0108000	O-rings o13x2,5 quality xp 70	1	PCS	5707292135124
18	82866	Lock for release head	1	PCS	5707292125606
19	1761000	Counter nut 10x1,0 fine thread	1	PCS	5707292141538
20	1102500	Planning washer 10 mm	1	PCS	5707292140234
21	2206420	Bloc-o-lift 600N	1	PCS	5707292562869
22	77660	Pedal left	1	PCS	5707292527608
23	0662500	Button head screw 8x25 stainl.	6	PCS	5707292139580
23.1	1101050	Spring washer M8	2	PCS	5707292458667
24	1100500	Spring washer 8mm, stainless	4	PCS	5707292140142
25	0659012	B.h. M/flange M6x10 FZB eslock	4	PCS	5707292578358
26	77617	Pin	2	PCS	5707292541017
27	77615	Bracket for angle adjustment	2	PCS	5707292528117
28	1350007	Pvc bush black 20x10,5x9,0mm	2	PCS	5707292545527
29	0609734	Thread form 4x10 FZB PZ	2	PCS	5707292577795
30	1607000	Lock nut 8mm, large pack	4	PCS	5707292141378
31	0624825	Insex screw counters. 8x25	4	PCS	5707292139078
32	1102010	Face plate 8,4x18x2mm, FZB	4	PCS	5707292429766
33	84607	Profile end prop	1	PCS	5707292548023
34	84606	Profile end prop	1	PCS	5707292545558
35	0622800	Insex screw counters. 6x20	8	PCS	5707292138972
36	0603525	Insex low head M8x12 stainless	6	PCS	5707292433749
37	0301006	Spring 1x10x10 mm stainless	6	PCS	5707292542229
38	1600521	Welding nut M8 w/flange	11	PCS	5707292360106
39	0623200	Insex screw counters. 6x30	2	PCS	5707292138996
40	77680	End plate	4	PCS	5707292527615
41	1940010	Plastite 60, 2,9x6,5	8	PCS	5707292142573
43	77688	End for Side profile	1	PCS	5707292540997
44	1103200	Fazet washer 8mm	4	PCS	5707292140296
45	0609734	Thread form 4x10 FZB PZ	1	PCS	5707292577795
46	0615016	Insex screw 5x16	10	PCS	5707292138859
*choose size/color					

Position	Art nr.	Description	Quantity	Unit of measure	Ean kode
47	77689	End for Side profile	1	PCS	5707292541000
48*	84578	Basic pole, size 3, 750 mm	2	PCS	5707292545589
	84579	Basic pole, size 4, 1000 mm	2	PCS	5707290000000
49	2504502	Wear 20x20x0,8-3 black	4	PCS	5707292582591
50	0609827	Stainless insex M6x20	4	PCS	5707292375049
52	77647	Mounting cover	1	PCS	5707292527561
53	77708	Side profile, size 3, Left	1	PCS	5707292563538
53	77709	Side profile, size 4, Left	1	PCS	5707290000000
54	0603535	Insex low head M8x25	6	PCS	5707292575319
55	77646	Mounting base	1	PCS	5707292527370
57*	77733	Base plate size 3 , mounted	1	PCS	5707292527967
	77734	Base plate size 4 , mounted	1	PCS	5707290000000
58 *	77673	Side profile, base plate, sz 3	1	PCS	5707292527745
	77674	Side profile, base plate, sz 4	1	PCS	5707290000000
59	102510	Adjustment indicator, size 2	2	PCS	5707292562548
60	124196	Footplate complte size 3	1	SÆT	5707292800473
60	121990	Footplate assembly size 4	1	SÆT	5707290000000
61	102451	Stop block, size 3+4	1	PCS	5707292561206
62	0603537	Insex low head M8x35	1	PCS	5707292575333
63	75291	Hexagon key nv=5	1	PCS	5707292437655
64	102586	Ferrule round with hole.	1	PCS	5707292563477
65	1105060	Stainless washer 6mm	4	PCS	5707292140357
66	113074	Inner tube for ajustm.unit s.3	1	PCS	5707292601896
66	113073	Inner tube for ajustm.unit s.4	1	PCS	5707290000000
70	100809	Center profile, base size 3+4	1	PCS	5707292561923
71	77683	Center profile,base sz 3-4	1	PCS	5707292527813
72	5040080	Protractor	1	PCS	5707292404459
73	0506519	Stainless blind rivet 4x12	2	PCS	5707292137388
74	1310610	Nylon washer din 125a, M8	2	PCS	5707292374684
75	0603550	Insex screw 8x50	1	PCS	5707292138255
76	1103200	Fazet washer 8mm	2	PCS	5707292140296
77	1607000	Lock nut 8mm, large pack	1	PCS	5707292141378
79	113068	Outer tube welded for adjustme	1	PCS	5707292601919
80	3502600	Tightening handle 65mm M8x16	1	PCS	5707292146922
11+92+93	103234	Wheel Mount Chrome	4	PCS	5707292565877
*choose size/color					

R82 A/S
Parallelvej 3
8751 Gedved
Denmark

Tel: +45 79 68 58 88
Fax: +45 75 66 51 92
E-mail: R82@etac.com
Web: etac.com

Cvr. Nr.: 16 20 21 85
Swift: JYBA DKKK
Iban No.: DK8072450002003501